NETWORKS, TECHNOLOGY & IT

Terminal Requirements for Caller Display Services

Network Services Reference	Terminal Requirements for Caller Display Services
Issue No.	6v0
Issue Date	22 January 2002

Enquiries relating to this document shall be addressed to:

The Director,
Product Engineering,
Networks, Technology and IT,
Telewest Communications plc,
Export House,
Cawsey Way,
Woking,
Surrey,
GU21 1QX

Email: product.engineering@telewest.co.uk

1 Contents

2 History

Issue	Date	Reason for issue
Draft A	March 1994	Issued for Comment
Issue 1	June 1994	First Issued
Issue 2	February 1995	1. Change of name from Cable TV Association to Cable Communications Association 2. Addition of Message Waiting Indication in Tables 3 and 4, Test Data tables CT3 and CT4, and table B10. and wording in paragraph 3.3 3. Corrections to data in test message CN2 4. Change of minimum Ring duration in Appendix A2, Table 1 from 50 ms to 200 ms.
Issue 3	August 1995	1. Re-Issued to re-define which tests must be carried out by the licensing bodies to adjudge that the CPE conforms to the CCA standard and those tests where a supplier's declaration that the CPE conforms to the specification is sufficient. 2. CCA Licensing section (1.3) added.
Issue 4	April 1997	1. Calling Number Display during Call Waiting (paragraph 4) 2. "No ring" Message Waiting Indication for feature/Centrex phones (paragraph 3.4). This has removed the AC7/FSK test in Table B.3 of Appendix 3. Removal of paragraph 1.3 on CCA Licensing 4. Change to Telewest contact name
Issue 5	March 2001	1. Changes to reflect Telewest taking sole ownership and responsibility for the document after the CCA was disbanded.
Issue 6v0	January 2002	1. Updated to reflect Telewest name change to Telewest Broadband. 2. Cross reference corrections

3 Introduction

There are two interfaces presented at the network termination point of public networks available for the use of Caller Display Services (CDS) services in the UK. One is BT's interface as described in BT's SIN227 and SIN242. The other interface is described in this document.

The reason why there are two interfaces for CDS is that where a PTO uses a digital local distribution network, then the method described in SIN227 will not work today without extensive modification to the existing local distribution network.

3.1 Scope

This specification defines the requirements for Terminal Equipment providing a calling number display facility. The information displayed may be:

- the caller's Calling Line Identity (CLI) and be displayed when the Terminal Equipment is on-hook
- the caller's CLI and be displayed when the Terminal Equipment is off-hook and engaged on another call; the Terminal Equipment having the call waiting feature assigned by the network and be operational at the time
- a message waiting indication turned on or off by the network without the Ring Pulse Alerting Signal (RP-AS). This is for feature/Centrex type Terminal Equipment only.

This CDS facility may be provided in a stand alone piece of apparatus or incorporated in apparatus providing additional facilities e.g. a telephone facility. The requirements are intended to ensure correct reception and detection of the received data. The method of displaying the received data is not defined.

Note: The calling line identity facility consists of two main features; the identity presentation and the identity restriction. It is only the presentation feature (CLIP) which is the subject of this specification. The restriction feature (CLIR), if provided, is effected by normal (DTMF) signalling from the Terminal Equipment originating the call and is therefore subject to the requirements of the access standard (NET4) and as such is outside the scope of this document.

3.2 Abbreviations and Definitions

BT	British Telecommunications plc
CCA	Cable Communications Association (no longer in existence)
CDS	Caller Display Services
CLI	Calling Line Identity
CLICW	CLI with Call Waiting
CLIP	Calling Line Identity Presentation
CLIR	Calling Line Identity Restriction
CPE	Customer Premises Equipment, see TE
PTO	Public Telephone Operator
RP-AS	Ring Pulse Alerting Signal or initial ring burst in previous versions of this document
SAS	Subscriber Alert Signal - Call waiting tone used to inform a user, already engaged on a call, that a third party is trying to contact them.
SIN	Suppliers Information Note (BT document)
TAS	Terminal Alerting Signal - used to alert the TE that data containing the third party's CLI is about to be transmitted by the network to the TE
TE	Terminal Equipment known also as Customer Premises Equipment CPE

3.3 References

V.23	CCITT Recommendation for 600/1200 baud modem for use on telephone networks
NET4	ETSI pr ETS 300 001 General technical requirements for equipment connected to an analogue subscriber interface in the PSTN.
BELL202	Bell Communications Research, i.e. Bellcore Standards Body
SIN227	BT Supplier Information Note titled "BT Analogue Caller Display Services - Service Description"

3.4 Acknowledgements

Mr. Fred Howett BNR, Harlow

4 General Requirements

4.1 Off-line Idle State

The Terminal Equipment (TE) shall be capable of presenting the following off-line idle state conditions to the network prior to the reception of CDS signalling:

a. The dc insulation resistance requirements of NET4 clause 2.2.1
b. The off-line input impedance requirements of NET4 clause 4.1.1
c. The noise level requirements of NET4 clause 4.5

4.2 Off-line ringing state

The Terminal Equipment shall meet the UK ringing condition requirements of NET4 clause 3.

4.3 Polarity Independence

The Terminal Equipment shall function correctly for either polarity of dc voltage applied at the line terminals.

4.4 Other Requirements

Terminal equipment providing facilities additional to the CLIP facility shall meet the requirements of relevant standards in addition to the requirements of this specification.

4.5 Off-line Signalling State

The Terminal Equipment shall enter an off-line signalling state in response to a Ring Pulse Alerting Signal (RP-AS) voltage applied to the Terminal Equipment via the network connection point, and shall leave the off-line signalling state when the signalling is completed or on receipt of a second burst of ringing. During the off-line signalling state, the Terminal Equipment shall be capable of correctly receiving and displaying valid CDS information.

5 Physical layer

5.1 RP-AS Detection

The Terminal Equipment shall correctly detect the presence of a RP-AS consisting of a DC polarity reversal and an AC voltage in the range 30 to 75 Vrms at a frequency of 25 Hz and of duration 200 to 450 ms.

Compliance to test cases AC1, AC2 and AC3 shall be as described in B3.
Compliance to test cases AC4, AC5, AC6 and AC7 shall by supplier's declaration.

5.2 Terminating Impedance

During the off-line signalling state, the Terminal Equipment shall present the following conditions to the network.

5.2.1 AC Termination

During the off-line signalling state the Terminal Equipment shall present one of the following AC conditions to the network:

a. The quiescent input impedance condition of the UK requirement of 4.1.1 of NET4
b. An impedance greater than 2Kohms but with an inductive component not exceeding 50 ohms, over the frequency range 200 to 4000 Hz.

Compliance shall be checked by the test described in B1 or by supplier's declaration.

5.2.2 DC Termination

During the off-line signalling state the Terminal Equipment shall present one of the following DC conditions to the network:

a. The insulation resistance condition of the UK requirement of 2.1.1.1 of NET4
b. A current drain of up to 0.5mA

Compliance shall be checked by the test described in B2.

Note: If the Terminal Equipment applies both the ac and dc conditions of 5.2.1 and 5.2.2 during the off-line signalling state, then the conditions applied to the network are the same as those of the off-line idle state and the requirement of 5.2.3.5 does not apply.

5.2.3 Timing Requirements

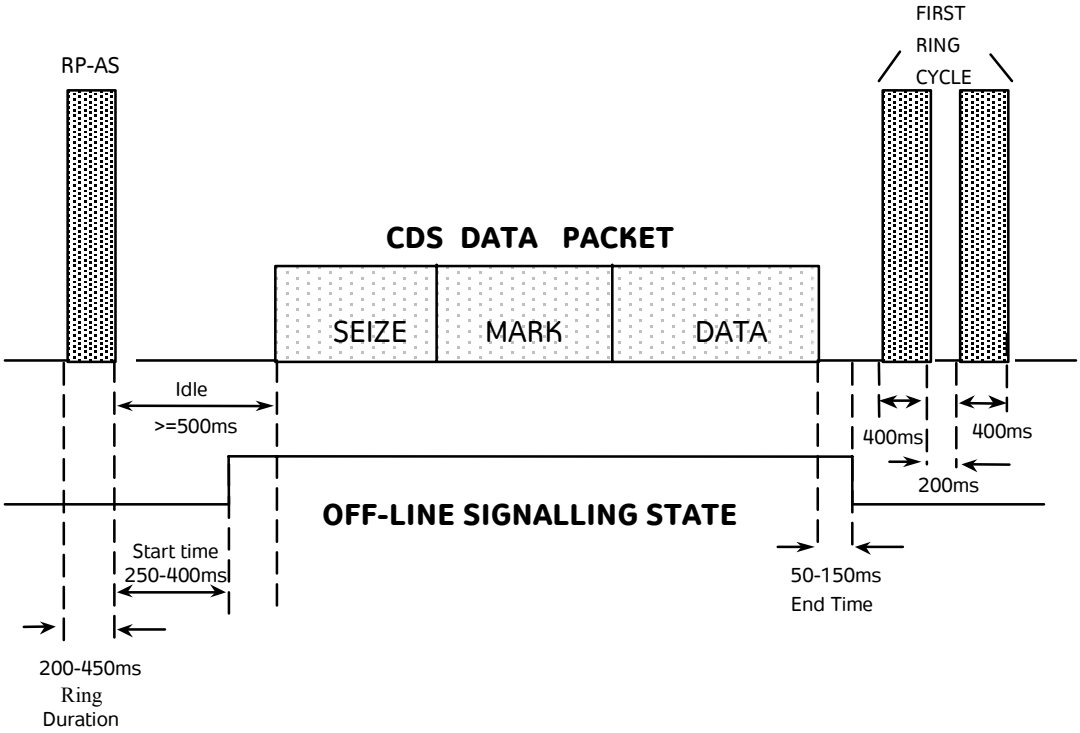

Figure 2 CDS Sequence for Networks using the CCA Standard

5.2.3.1 Start Time

The Terminal Equipment shall enter the off-line signalling state within 250 to 400 ms of detecting the end of an RP-AS. See Figure 2.

5.2.3.2 End Time

The Terminal Equipment shall leave the off-line signalling state and revert to the off-line idle state within 50 - 150 ms from when the CDS message has been completely signalled. See Figure 2.

5.2.3.3 Time-out

The Terminal Equipment shall revert to the off-line idle state if a channel seizure message is not received within 2s from the end of the RP-AS.

5.2.3.4 Ringing Arrival

The Terminal Equipment shall leave the off-line signalling state, and enter the off-line idle state or the off-line ringing state on receipt of a second ring burst.

5.2.3.5 Termination

If both the ac and dc conditions of 5.2.1 and 5.2.2 are applied during the off-line signalling state, then they shall be both applied and both removed within 10 ms of each other.

Compliance with the requirements of paragraph 5.2.3.1 through to paragraph 5.2.3.4 shall be checked by test cases as described in B3 or by supplier's declaration.

Compliance with the requirements of paragraph 5.2.3.5 shall be by supplier's declaration.

Note: The network ensures that the silence period between the end of the RP-AS and the start of the data transmission will have a minimum duration of 500 ms, and that the first ring cycle will not start within 200 ms from the end of the data transmission.
Note: The RP-AS may be accompanied by a DC polarity reversal.

5.2.4 Signalling Format

Signalling of the CDS information to the Terminal Equipment is by means of the frequency shift keying (FSK) method based upon CCITT V.23 or Bellcore 202 standards.

5.2.4.1 Signalling Frequencies

The Terminal Equipment shall be capable of correctly receiving CDS information within the following frequency ranges:

a. Mark frequency: 1300 HZ +/- 1.5 %, space frequency: 2100 Hz +/- 1.5% (V23)
b. Mark frequency: 1200 HZ +/- 1.5 %, space frequency: 2200 Hz +/- 1.5% (Bell202)

5.2.4.2 Signalling Levels

The Terminal Equipment shall be capable of correctly receiving CDS signalling tones with levels within the range -10 to -30 dBV measured between the line terminals, and with a difference in level between the mark and space tones not exceeding 6 dB.

5.2.4.3 Unwanted Signals

The Terminal Equipment shall correctly receive CDS signalling tones of correct frequency and level in the presence of unwanted voice band (300-3400Hz) signals with a total power not exceeding a level 20 dB below the level of the CDS tones.

Compliance of paragraph 5.2.4 shall by the test cases FSK1 and FSK2 as described in B4.

Test cases FSK3, FSK4, FSK5 and FSK6 shall be as described in B4 or by supplier's declaration.

5.3 Datalink Layer - Data Reception

The CDS information is transmitted to the Terminal Equipment in the form of a datalink packet comprising several data fields of variable length. The structure of the datalink packet is shown in Annex 1.

5.3.1 Channel Seizure

The Terminal Equipment shall correctly receive datalink packets with a channel seizure field of length 96 to 315 bits at 1200 bits/sec.

Compliance shall be checked by the test described in B5 or by supplier's declaration.

5.3.2 Mark Signal

The Terminal Equipment shall correctly receive datalink packets with a mark signal field of length 55 to 315 bits at 1200 bits/sec. The Terminal Equipment shall ignore received datalink packets with a mark signal field of length less than 55 bits at 1200 bits/sec.

Compliance shall be checked by the test described in B6 or by supplier's declaration.

5.3.3 Message Type

The Terminal Equipment shall correctly receive datalink packets containing "call set-up" message types.

Compliance shall be checked by the test described in B7 or by supplier's declaration.

5.3.4 Message Length

The Terminal Equipment shall correctly receive datalink packets with presentation layer messages of length 0 to 75 bytes.

Compliance shall be by supplier's declaration

Note: although the maximum length of message currently identified is 75 bytes, future applications may extend this to 255 bytes. It is recommended that Terminal Equipment should be able to calculate the validity of the checksum for messages of the maximum length.

5.3.5 Checksum

The Terminal Equipment shall correctly receive datalink packets with a valid checksum and a presentation layer message field of length 0 to 75 bytes. The Terminal Equipment shall identify any incorrect checksum fields and ignore the transmission or display an error message. The Terminal Equipment shall identify any received datalink packets without a checksum field and ignore the transmission or display an error message.

Compliance shall be checked by the test described in B9

Note: The checksum may be validated in the Terminal Equipment by calculating the 8 bit sum of all the fields from the message type field to the checksum field inclusive and ignoring any carry from the most significant bit. A resultant sum of zero indicates a correct checksum.

5.4 Presentation Layer - CLIP Message Interpretation

The Terminal Equipment shall correctly interpret valid "call set-up" type messages containing the following parameter types:

a. All type
b. Time and date
c. Calling line directory number
d. Reason for absence of directory number

The Terminal Equipment may optionally interpret valid "call set-up" type messages and Message Waiting Indication messages containing the following parameter types:

e. Caller name/text
f. Called directory number
g. Reason for absence of caller name
h. Visual message waiting indication status

If the "call type" parameter is not included in the received data, the Terminal Equipment shall assume the call type is "voice call" and shall correctly process any valid data.

If an unrecognised "call type" parameter is received, the Terminal Equipment shall either ignore the message or indicate an error.

Compliance shall checked be by test cases TP7, TP8, TP9, TP10, TP13 and TP14 in B10 or by supplier's declaration

Message Waiting Indication as described above is an optional feature the supplier may wish to provide. If Message Waiting Indication is provided, then the supplier shall provide a supplier's declaration that it conforms to test cases TP11 and TP12 in B10

5.5 Requirements for "No-Ring" Message Waiting Indicator facility

This (optional) facility enables the switch to cause the Terminal Equipment to turn on or off the TE's Message Waiting Indicator without alerting the Terminal Equipment with an RP-AS (or line reversal) and is designed primary for office/ Centrex use. As there is no RP-AS or line reversal to 'awaken' the data receiver in the TE, the TE must be either equipped with an external power supply or have internal power with sufficient capacity to allow the data receiver to be permanently activated.

5.5.1 Impedance

Whenever a datalink packet is received which is not preceded by an RP-AS the terminal shall continue to meet the off-line idle requirements of paragraph 2.1 (a) and (b) throughout the data transmission period.

Compliance shall be by supplier's declaration.

5.5.2 Timing Requirements

Since the terminal is not presented with an RP-AS prior to data reception, and the terminal presents the normal quiescent conditions throughout data transmission, the timing requirements of paragraphs 3.1.3 do not apply.

5.5.3 Datalink Layer

5.5.3.1 Packet Structure

The Terminal Equipment shall meet the requirements for channel seizure, mark signal, and checksum defined in paragraphs 3.2.1, 3.2.2, and 3.2.5.

5.5.3.2 Message Type

The Terminal Equipment shall correctly receive datalink packets containing the Message Waiting Indicator message type.

Compliance shall be checked by the test described in B.11 or by supplier's declaration.

6 On-line Signalling State - Call Waiting Caller ID

This facility is an enhancement to the normal call waiting facility, whereby a user who is engaged on a call receives audible warning that an incoming call is waiting plus visual information about a third party who is attempting to contact the user. The audible indication is the normal call waiting tone and the visual indication is the new callers CLI displayed on the Terminal Equipment (TE).

6.1 Operating Sequence

6.1.1 The Terminal Equipment with the call waiting feature assigned, is off-hook and engaged on a call. A third party calls the Terminal Equipment and hears ringing tone.

6.1.2 The network sends the normal call waiting tone (SAS) to the user via the TE. This is heard by the user but ignored by the TE

6.1.3 The network sends a terminal alerting signal (TAS) to the Terminal Equipment in order to identify whether the Terminal Equipment has the CLI with Call Waiting (CLICW) facility or not.

6.1.4 A Terminal Equipment with a CLICW facility acknowledges the TAS by transmitting a DTMF digit (ACK signal) back to the network. The Terminal Equipment prepares itself for data reception and mutes any speech paths.

6.1.5 (If the network does not detect an ACK signal within 165ms then it will assume the Terminal Equipment does not have the CLICW facility and will not transmit the CLI to the TE)

6.1.6 The network transmits the CLI data to the Terminal Equipment which displays the CLI as for an on-hook call

6.1.7 On completion of data transmission, the Terminal Equipment restores the speech paths.

Compliance with the requirements of this section shall be by the test of B.12 or by supplier's declaration

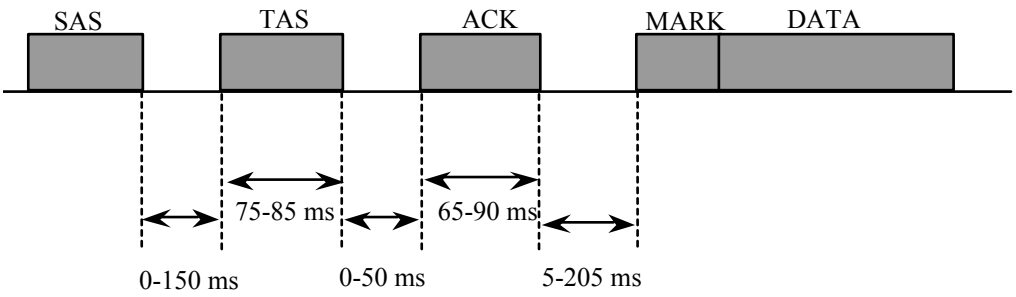

6.2 Terminal Alerting Signal (TAS)

The terminal shall correctly detect a dual tone alerting signal in the presence of voice-band (300-3400) speech signals. The TAS signal characteristics are shown in Table 1.

Nominal frequencies	2130 Hz and 2750 Hz ± 0.5 %
Maximum difference in tone levels	6dB
Signal levels	-4 to -40dBV between the line terminals
Duration	75-85 ms

Table 1 - TAS characteristics

6.3 Terminal Acknowledge Signal (ACK)

The terminal shall respond to the TAS by sending a DTMF digit 'D' of duration 65 to 90 ms to the network within the range 0 to 50 ms from the end of the received terminal alerting signal (TAS). During the transmission of the DTMF digit, any manually operated keypad signalling functions shall be disabled, and

the sending speech path attenuated to avoid corruption of the digit. The receiving speech path shall be attenuated to prevent the user from hearing the DTMF digit at an uncomfortably loud level.

Note: the requirements for DTMF signalling may be found in ETSI document: pr.TBR 21

6.4 Data Reception

The terminal shall be ready to receive FSK data starting within the range 5 to 205 ms from the end of the transmitted DTMF digit. During the data reception condition, any manually operated keypad signalling functions shall be disabled, and the sending speech path muted to avoid corruption of the received data. The receiving speech path shall be muted or attenuated to prevent the user from hearing the received data at an uncomfortably loud level.

6.5 Data Structure

The Terminal Equipment shall correctly receive datalink packets with the following structure:

a. No seize signal
b. Mark signal as defined in clause 3.2.2
   Note: the nominal mark signal is 80 bits
c. Call set-up message type, with a presentation layer message as defined in clause 3.3
d. Checksum as defined in clause 3.2.5.

6.6 Time-out

The terminal shall restore the normal on line transmission conditions, and enable any manual signalling facility if no FSK data, or if invalid FSK data is received within 2 seconds from the end of the ACK signal.

Note: It is recommended that the time-out period be as short as possible in order to minimise the period that the transmission path is muted.

6.7 Restoration

The terminal shall restore the normal on line transmission conditions, and enable any manual signalling facility within 30 ms from the end of a valid data transmission.

7 Appendix A - General Conditions of Test

7.1 Test Configuration

Unless otherwise stated in this specification, the Terminal Equipment under test shall be connected as part of the test circuit shown in Figure 3. CDS information shall be signalled to the Terminal Equipment as defined in the relevant test, and the performance of the TEUT monitored to observe the appropriate response. Signalling of the CDS information for each test will be defined in 3 parts:

1. Alerting case
2. Signalling case
3. Test packet

The Alerting case defines the characteristics of the RP-AS and silence period; the Signalling case defines the physical characteristics of the transmission e.g. tone frequencies and levels; and the Test packet defines the CLIP messages and variants of the datalink packet structure. Each test message will be defined in the form "AC1: FSK1:TP3"

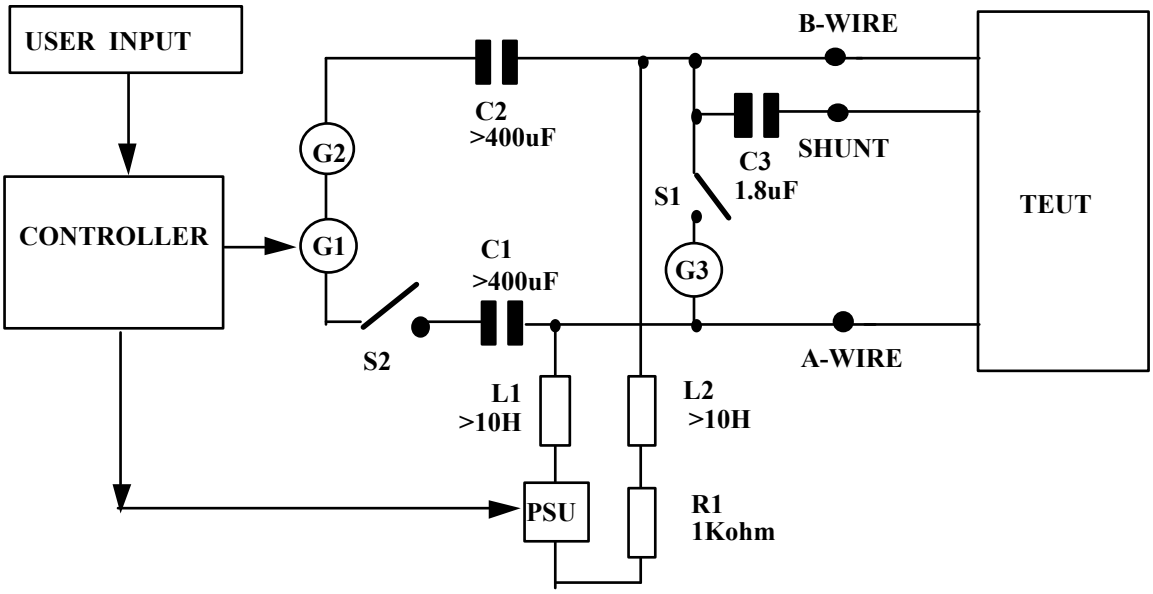

Figure 3 - Test Circuit

G1 is a generator capable of providing FSK signalling frequencies and levels as defined in Table 2.
G2 is a generator capable of providing in-band noise signals as defined in table 2.
G3 is a generator capable of providing a ringing signal at frequencies and levels defined in Table 1.
S1 is a switch used to apply the ringing signal to the Terminal Equipment for the required time.
S2 is a switch used to prevent ringing current passing through the generators G2 and G3.
PSU is a 50 volt D.C. power supply with the capability of providing polarity reversals.
The controller is used to generate the appropriate bit streams for the test packet types defined in Table 3, and applying them to generator G1 for conversion into FSK signals. The controller may also be used to control the operation of generators G2 and G3, the switches S1 and S2, and applying a polarity reversal of the PSU.
Note: The impedances of the generators are not critical providing they are capable of producing the required levels at the network termination point. Generators G1 and G2 may be combined.

7.2 A.2 Test Cases

Table A.1 - Alerting conditions

Parameter	AC1	AC2	AC3	AC4	AC5	AC6	AC7
Ring Frequency - Hz	25	25	25	25	25	25	--
Ring voltage - Vrms (between A-wire, B-wire)	75	30	30	50	50	50	0 no ring
Ring duration - ms	200	400	200	200	500	200	--
Silence duration - ms	500	500	500	2000	500	750	--

Table A.2 - FSK signalling conditions

Parameter	FSK1	FSK2	FSK3	FSK4	FSK5	FSK6
Mark frequency (logic 1) – Hz	1200	1300	1182	1218	1280.5	1319.5
Space frequency (logic 0) - Hz	2200	2100	2167	2233	2069.5	2131.5
Mark level (between A-wire, B-wire)	-15 dBV	-15 dBV	-30 dBV	-24 dBV	-30 dBV	-16 dBV
Space level (between A-wire, B-wire)	-15 dBV	-15 dBV	-24 dBV	-30 dBV	-24 dBV	-10 dBV
Interfering signal level	none	none	none	none	-20 dB	-20 dB

Table A.3 - CDS test messages

Test Packet type	TP1	TP2	TP3	TP4	TP5	TP6	TP7	TP8
Channel seize	SZ1	SZ2	SZ1	SZ1	SZ1	SZ1	SZ1	SZ1
Mark period	MK1	MK1	MK2	MK3	MK1	MK1	MK1	MK1
Message type	MT1	MT1	MT1	MT1	MT2	MT1	MT1	MT1
Presentation message	PM1	PM1	PM1	PM1	PM1	PM1	PM2	PM3
Checksum	CH1	CH1	CH1	CH1	CH1	CH2	CH1	CH1

Table A.3 - CDS test messages [continued]

Test Packet type	TP9	TP10	TP11	TP12	TP13	TP14	TP15
Channel seize	SZ2	SZ1	SZ1	SZ1	SZ2	SZ2	SZ3
Mark period	MK1	MK3	MK1	MK1	MK3	MK3	MK4
Message type	MT1	MT1	MT3	MT3	MT1	MT1	MT1
Presentation message	PM4	PM5	PM6	PM7	PM8	PM9	PM1
Checksum	CH1	CH1	CH1	CH1	CH1	CH1	CH1

Table A.4 - CLIP test messages

Presentation Layer Message type	PM1	PM2	PM3	PM4	PM5	PM6	PM7	PM8	PM9
Message Type	MT1 (80H)	MT2 (81H)	MT1 (80H)	MT1 (80H)	MT1 (80H)	MT3 (82H)	MT3 (82H)	MT1 (80H)	MT1 (80H)
Message length (bytes)	ML1 (48)	ML1 (48)	ML2 (45)	ML3 (39)	ML3 (39)	ML7 (3)	ML7 (3)	ML5 (41)	ML6 (75)
Call type	CT1	CT2	---	CT1	CT1	CT3	CT4	CT1	CT1
Time and date	TD1	TD1	TD1	TD1	TD1	---	---	TD1	TD1
Calling line directory number	CL1	CL1	CL1	---	---	---	---	CL1	CL3
Called line directory number	CL2	CL2	CL2	CL2	CL2	---	---	CL2	CL4
Caller name/text	CN1	CN1	CN1	CN1	CN1	---	---	---	CN2
Reason for absence of caller number	---	---	---	RA1	RA2	---	---	---	---
Reason for absence of caller name	---	---	---	---	---	---	---	RA3	---

Table A.5 TAS signalling conditions

Parameter	DT1	DT2	DT3	DT4
low freqency level	-15dBV	-34dBV	-10dBV	-15dBV
high frequency level	-15dBV	-40dBV	-4dBV	-15dBV
tone duration	80ms	75 ms	85ms	80ms
interfering signal level	none	none	none	-40 dBV

A.3 Test Data

Test	Data	Comments
SZ1	96 bits alternating mark and space	minimum length seize period
SZ2	300 bits alternating mark and space (start with space, end with mark)	ETSI preferred value seize period
SZ3	0 bits	no sieze signal for CLICW
MK1	55 bits continuous mark	minimum valid mark period
MK2	25 bits continuous mark	invalid mark period
MK3	180 bits continuous mark	ETSI preferred value mark period
MK4	80 bits continuous mark	mark period for CLICW
CH1	correct checksum	calculated for each message
CH2	incorrect checksum	calculated for each message
MT1	1000 0000 80H	call setup Message Type
MT2	1000 0001 81H	non call setup Message Type
MT3	1000 0010 82H	Message Waiting Message Type
ML1	00110000 30H	48 byte message
ML2	00101101 2DH	45 byte message
ML3	00100111 27H	39 byte message
ML4	00000110 06H	6 byte message
ML5	00101001 29H	41 byte message
ML6	01001011 4BH	75 byte message
ML7	00001011 03H	3 byte message

CT1 test	data	meaning
Parameter type	00010001 11H	call type
Parameter length	00000001 01H	1 byte parameter data
Parameter data	00000001 01H	voice call

CT2 test	data	meaning
Parameter type	00010001 11H	call type
Parameter length	00000001 01H	1 byte parameter data
Parameter data	00000010 02H	ring back when free call

CT3 test	data	meaning
Parameter type	00001011 0BH	call type
Parameter length	00000001 01H	1 byte parameter data
Parameter data	11111111 FFH	message waiting Indicator ON

CT4 test	data	meaning
Parameter type	00001011 0BH	call type
Parameter length	00000001 01H	1 byte parameter data
Parameter data	0000000 00H	message waiting Indicator OFF

RA1 test	data	meaning
Parameter type	00000100 04H	reason for absence of caller number
Parameter length	00000001 01H	1 byte parameter data
Parameter data	01001111 4FH	caller number unavailable

RA2 test	data	meaning
Parameter type	00000100 04H	reason for absence of caller number
Parameter length	00000001 01H	1 byte parameter data
Parameter data	01010000 50H	caller number withheld

RA3	data	meaning
Parameter type	00001000 08H	reason for absence of caller name
Parameter length	00000001 01H	1 byte parameter data
Parameter data	01010000 50H	caller name withheld

TD1	data	meaning - (10:30 a.m. 23rd February)
Parameter type	00000001 01H	time and date
Parameter length	00001000 08H	8 bytes parameter data

Parameter data	00110000 30H	0 IA5
"	00110010 32H	2 IA5
"	00110010 32H	2 IA5
"	00110011 33H	3 IA5
"	00110001 31H	1 IA5
"	00110000 30H	0 IA5
"	00110011 33H	3 IA5
"	00110000 30H	0 IA5

CL1	**data**	**meaning - (0123-45678)**
Parameter type	00000010 02H	calling line directory number
Parameter length	00001010 0AH	10 bytes parameter data
Parameter data	00110000 30H	0 IA5
"	00110001 31H	1 IA5
"	00110010 32H	2 IA5
"	00110011 33H	3 IA5
"	00101101 2DH	- IA5
"	00110100 34H	4 IA5
"	00110101 35H	5 IA5
"	00110110 36H	6 IA5
"	00110111 37H	7 IA5
"	00111000 38H	8 IA5

CL2	**data**	**meaning - (0456-789123)**
Parameter type	00000011 03H	called line directory number
Parameter length	00001011 0BH	11 bytes parameter data
Parameter data	00110000 30H	0 IA5
"	00110100 34H	4 IA5
"	00110101 35H	5 IA5
"	00110110 36H	6 IA5
"	00101101 2DH	- IA5
"	00110111 37H	7 IA5
"	00111000 38H	8 IA5
"	00111001 39H	9 IA5
"	00110001 31H	1 IA5
"	00111010 32H	2 IA5
"	00110011 33H	3 IA5

CL3	**data**	**meaning - maximum length number**
Parameter type	00000010 02H	calling line directory number
Parameter length	00010010 12H	18 bytes parameter data
Parameter data	00110000 30H	0 IA5
"	00110001 31H	1 IA5
"	00110010 32H	2 IA5
"	00110011 33H	3 IA5
"	00101101 2DH	- IA5
"	00110100 34H	4 IA5
"	00110101 35H	5 IA5
"	00110110 36H	6 IA5
"	00110111 37H	7 IA5
"	00111000 38H	8 IA5
"	00101101 2DH	- IA5
"	00110001 31H	1 IA5
"	00110010 32H	2 IA5
"	00110011 33H	3 IA5
"	00110100 34H	4 IA5
"	00110101 35H	5 IA5
"	00110110 36H	6 IA5
"	00110111 37H	7 IA5

CL4	data	Meaning - maximum number
Parameter type	00000011 03H	Called line directory number
Parameter length	00010010 12H	18 bytes parameter data
Parameter data	00110000 30H	0 IA5
"	00110100 34H	4 IA5
"	00110101 35H	5 IA5
"	00110110 36H	6 IA5
"	00110111 37H	7 IA5
"	00111000 38H	8 IA5
"	00101101 2DH	- IA5
"	00110001 31H	1 IA5
"	00110010 32H	2 IA5
"	00110011 33H	3 IA5
"	00110100 34H	4 IA5
"	00110101 35H	5 IA5
"	00101101 2DH	- IA5
"	00110110 36H	6 IA5
"	00110111 37H	7 IA5
"	00111000 38H	8 IA5
"	00111001 39H	9 IA5
	00110000 30H	0 IA5

CN1	data	Meaning - (A.Caller)
Parameter type	00000111 07H	Caller name/text
Parameter length	00001000 08H	8 bytes parameter data
Parameter data	01000001 41H	A IA5
"	00101110 2EH	. IA5
"	01000011 43H	C IA5
"	01100001 61H	a IA5
"	01101100 6CH	l IA5
"	01101100 6CH	l IA5
"	01100101 65H	e IA5
"	01110010 72H	r IA5

CN2	data	Meaning (maximum length message)
Parameter type	00000111 07H	Caller name/text
Parameter length	00010100 14H	20 bytes parameter data
"	01101101 6DH	M IA5
"	01100001 61H	A IA5
"	01111000 78H	X IA5
"	01101001 69H	I IA5
"	01101101 6DH	M IA5
"	01110101 75H	U IA5
"	01101101 6DH	m IA5
"	00100000 20H	Space IA5
"	01110100 74H	t IA5
"	01100101 65H	e IA5
"	01110011 73H	s IA5
"	01110100 74H	t IA5
"	00100000 20H	space IA5
"	01101101 6DH	m IA5
"	01100101 65H	e IA5
"	01110011 73H	s IA5
"	01110011 73H	s IA5
"	01100001 61H	a IA5
"	01100111 67H	g IA5
"	01100101 65H	e IA5

8 Appendix B - Test Requirements

8.1 A.C. Termination

The Terminal Equipment shall be connected as shown in Figure 3, with generator G2 replaced by a short circuit and switch S2 replaced by a 2Kohm resistor R2. The controller is set to transmit a valid alerting signal to the Terminal Equipment to place it in the off-line signalling state, followed by a valid datalink message. The voltages across R2 and the Terminal Equipment are monitored during the data transmission. The modulus of the Terminal Equipment input impedance is derived from the ac voltage across the Terminal Equipment and the ac current through the resistor R2.

8.2 D.C Termination

The Terminal Equipment shall be connected as shown in Figure 3. The controller is set to transmit a valid alerting signal to the Terminal Equipment to place it in the off-line signalling state. The current drawn by the Terminal Equipment in the off-line signalling state is calculated from measurement of the voltage across resistor R1.

8.3 Timing Requirements

The Terminal Equipment shall be connected as shown in Figure 3. The controller is set to transmit the test packet TP1 to the TEUT for each of the following test cases:

Ringing case	Modem case	Result
AC1	FSK1	correct reception of CDS data
AC2	FSK1	correct reception of CDS data
AC3	FSK1	correct reception of CDS data
AC4	FSK1	message rejected (silence period too long)
AC5	FSK1	message rejected (ring burst too long)
AC6 * cadenced ring starts 1 sec after end of RP-AS	* no data packet	TEUT returns to the off-line idle state at start of cadenced ringing or to the off-line ringing state if the Terminal Equipment is fitted with a ringer. No message displayed.
AC7	FSK1	message rejected (no RP-AS)

8.4 Signalling Requirements

The Terminal Equipment shall be connected as shown in Figure 3. The controller is set to transmit the test packet TP1 to the TEUT for each of the following test cases:

Modem Case	Ringing Case	Result
FSK1	AC6	correct reception of CDS data
FSK2	AC6	correct reception of CDS data
FSK3	AC6	correct reception of CDS data
FSK4	AC6	correct reception of CDS data
FSK5	AC6	correct reception of CDS data
FSK6	AC6	correct reception of CDS data

Check that the result for each case is in accordance with the above table.

8.5 Channel Seizure

The Terminal Equipment shall be connected as shown in Figure 3. The controller is set to transmit the following test messages to the TEUT.

AC6: FSK1: TP1 (minimum seize period)
AC6: FSK1: TP2 (maximum seize period)

Check that each message is correctly interpreted by the TEUT.

8.6 Mark Signal

The Terminal Equipment shall be connected as shown in Figure 3. The controller is set to transmit the following test messages to the TEUT.

AC6:FSK1:TP4 (maximum mark period)

Check that each message is correctly interpreted by the TEUT.

AC6:FSK1:TP3 (invalid mark period)

Check that the message is correctly rejected or an error message displayed by the TEUT.

AC6:FSK1:TP4 (maximum mark period)

Check that each message is correctly interpreted by the TEUT.

Note: The minimum valid mark period is tested during test B.5

8.7 Message Type

The Terminal Equipment shall be connected as shown in Figure 3. The controller is set to transmit the following test message to the TEUT.

AC6:FSK1:TP5 (non supplementary information type message)

Check that the message is correctly rejected or an error message displayed by the TEUT.

Note: The valid supplementary information message type is tested during test B5

8.8 Message Length

There is no specific test for message length.

Note: The check for correct interpretation of the message length field by the TEUT is implicit on correct interpretation of the range of CLIP messages tested in B10.

8.9 Checksum

The Terminal Equipment shall be connected as shown in Figure 3. The controller is set to transmit the following test message to the TEUT.

AC6:FSK1:TP6 (incorrect checksum)

Check that the message is correctly rejected or an error message displayed by the TEUT.

Note: A valid checksum message is tested during test B5

8.10 CLIP Messages

The Terminal Equipment shall be connected as shown in Figure 3. The controller is set to transmit the following test messages to the TEUT.

Check that each message is correctly interpreted by the TEUT.

Test data	Test case	Result
AC6:FSK1:TP7	call type: ring back when free valid CLI message	message ignored
AC6:FSK1:TP8	call type: absent valid CLI message	Correct reception of CDS data
AC6:FSK1:TP9	call type: voice valid CLI message	Correct reception of CDS data
AC6:FSK1:TP10	call type: voice valid CLI message	Correct reception of CDS data
AC6:FSK1:TP11	call type: message waiting valid message	Message Waiting Indicator ON
AC6:FSK1:TP12	call type: message waiting valid message	Message Waiting Indicator OFF
AC6:FSK1:TP13	call type: voice valid CLI message	Correct reception of CDS data
AC6:FSK1:TP14	call type: voice maximum length valid CLI message	Correct reception of CDS data

8.11 Test for No-Ring "Message Waiting Indicator" messages

The Terminal Equipment shall be connected as shown in Figure 3. The controller is set to transmit the following test messages to the TEUT

Check that each message is correctly interpreted by the TEUT.

Test Data	Test Case	Result
Case 1		
AC7:FSK1:TP11	Call type: message waiting No RP-AS	Message waiting indicator ON
AC7:FSK1:TP12	Call type: message waiting No RP-AS	Message waiting indicator OFF
Case 2		
AC6:FSK1:TP11	Call type: message waiting RP-AS present	Message waiting indicator ON
AC7:FSK1:TP12	Call type: message waiting No RP-AS	Message waiting indicator OFF

Note: The 'normal' case, where the message waiting indicator on and off messages are both preceded by the RP-AS, is covered in B10

8.12 Test for spontaneous call waiting identification

The Terminal Equipment shall be connected as shown in Figure 3. A suitable DTMF detector with a high input impedance is connected between the A-wire and B-wire. The output of the detector is connected to the controller such that the controller can send the FSK data when a valid DTMF digit is detected.

The Terminal Equipment is put into the on-line condition. The generator G2 is arranged to send voice band limited pink noise at a level of -15 dBm to simulate speech and permit checking of the Terminal Equipment muting. The controller is arranged to send a TAS signal according to Table A.5, to check for the reception of a valid DTMF "D" digit and then send the FSK data.

The controller is arranged to send the following test sequences to the TE

DT1:FSK1:TP15
DT2:FSK1:TP15
DT3:FSK1:TP15
DT4:FSK1:TP15

Check that each message is correctly interpreted by the TE.

9 Informative Annex 1 - Data format

The data received by the Terminal Equipment will normally be formatted as defined in this section and shown in Figure 4.

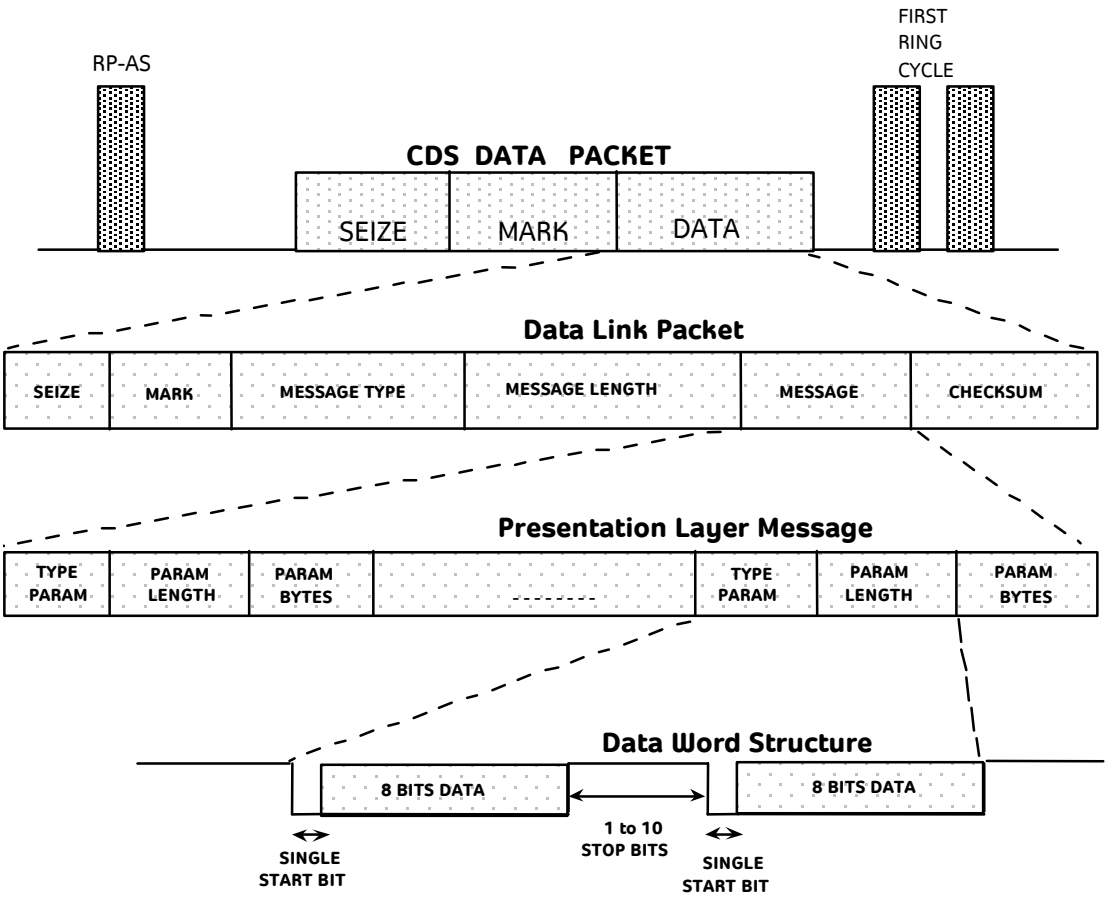

Figure 4 Data Structure

Data packet: The data comprises a single continuous burst of binary frequency shift keying transmitted between the RP-AS and the start of the normal ring cadence.

Format: Data is transferred in a serial, binary, asynchronous format at a rate of 1200 baud.

Sequence: Channel seize is transmitted first and checksum last. Within each data word, the least significant bit is transmitted first, the most significant bit last.

Seize: The seize field consists of between 96 and 315 continuous bits of alternating mark and space.

Mark: The mark field consists of between 55 and 315 bits of continuous mark.

Checksum: The checksum field comprises a single byte of data equal to the two's complement of the modulo 256 sum of all bytes in the data burst starting with the "message type" field up to and including the last message byte prior to the checksum.

Data word structure: Each data words comprises one start bit (space) then eight data bits followed by between one and ten stop bits (mark).

Character set: The message characters are coded according to International Alphabet No. 5 (IA5) with the exception that position 2/4 (column 2; row 4) represents the £ sign. The 7 bit IA5 code is sent in 8 bit format with the most significant bit set to zero. The non displayable characters with codes from 0 to 31 are not used.

End of Document